securistyle

CI/SfB Reference (31.49) X

June 2010

VIRAGE

A new direction in window handles

VIRAGE

AVAILABLE IN OFFSET AND IN-LINE ESPAGNOLETTE AND COCKSPUR, THE VIRAGE HANDLE RANGE OFFERS:

- Ergonomic design for comfort
- Positive stop on offset espagnolette and cockspur to ensure accurate in-line closure
- In-line espagnolette version for slimline profiles and non-handed applications
- Push to unlatch mechanism
- Key dead locking for added security
- Non locking push button version for emergency escape
- Green button Egress version available in in-line and offset espagnolette
- Suited look for espagnolette and cockspur mixed applications
- 10 year guarantee for Virage Espagnolette (details available upon request)
- Non-locking, non-latching version available

COLOUR RANGE

VIRAGE ESPAGNOLETTE

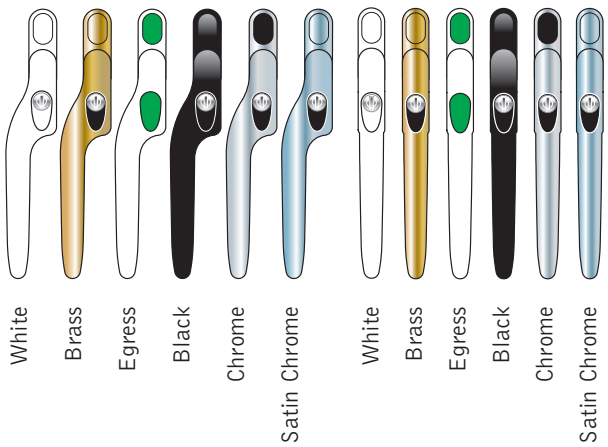

VIRAGE COCKSPUR

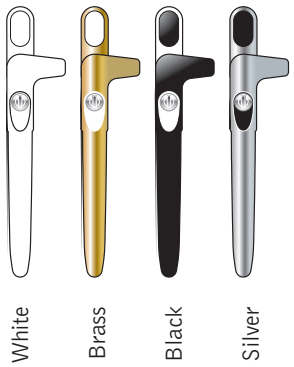

Securistyle Ltd. Kingsmead Industrial Estate, Princess Elizabeth Way, Cheltenham, Glos. GL51 7RE, UK.
Tel: +44 (0) 1242 221200 Fax: +44 (0) 1242 228194/520828 E-mail: info@securistyle.co.uk
Website: www.securistyle.co.uk

VIRAGE
Product Specification

PRODUCT SPECIFICATION

VIRAGE ESPAGNOLETTE OFFSET

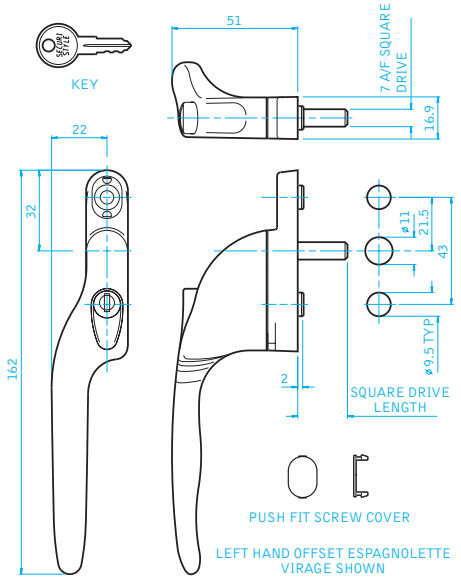

VIRAGE ESPAGNOLETTE INLINE

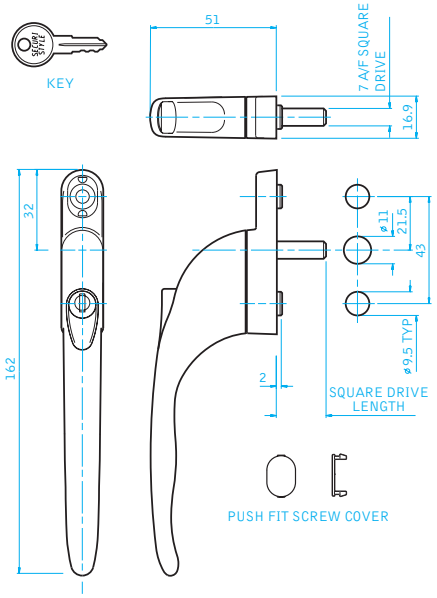

VIRAGE COCKSPUR

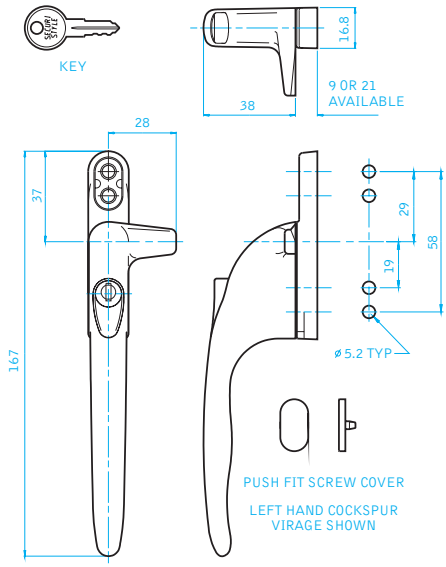

VIRAGE ESPAGNOLETTE	OFFSET	INLINE
	Part Code	Part Code
Espagnolette Locking	EBC	EBI
Egress	EEC*	EEI*
Non Locking	EC	EI
Square Drive Length (mm)	09,12,15,20,25, 30,40	09,12,15,20,25,30,40
Colour	BK (Black) WH (White) CH (Chrome) BS (Brass) SC (Satin Chrome)	BK (Black) WH (White) CH (Chrome) BS (Brass) SC (Satin Chrome)
Hand	R (Right) L (Left)	

*Available with green button in white only.
†Currently only available in 9mm base height.

VIRAGE COCKSPUR	
	Part Code
Cockspur Locking	CB
Non Locking	C
Base Height (mm)	09,21
Colour	WH (White) BS (Brass) BK (Black)† SL (Silver)† CH (Chrome)† SC (Satin Chrome)†
Hand	R (Right) L (Left)

INVESTOR IN PEOPLE

Due to our policy of continual improvement we reserve the right to alter specifications without notice. It is the responsibility of the window manufacturer to ensure that the finished window meets the required performance and safety specification.

All transactions are subject to our standard conditions of supply, which are available on request.

Designed by Earl & Thompson Marketing Limited. UK. Tel:01452 627100